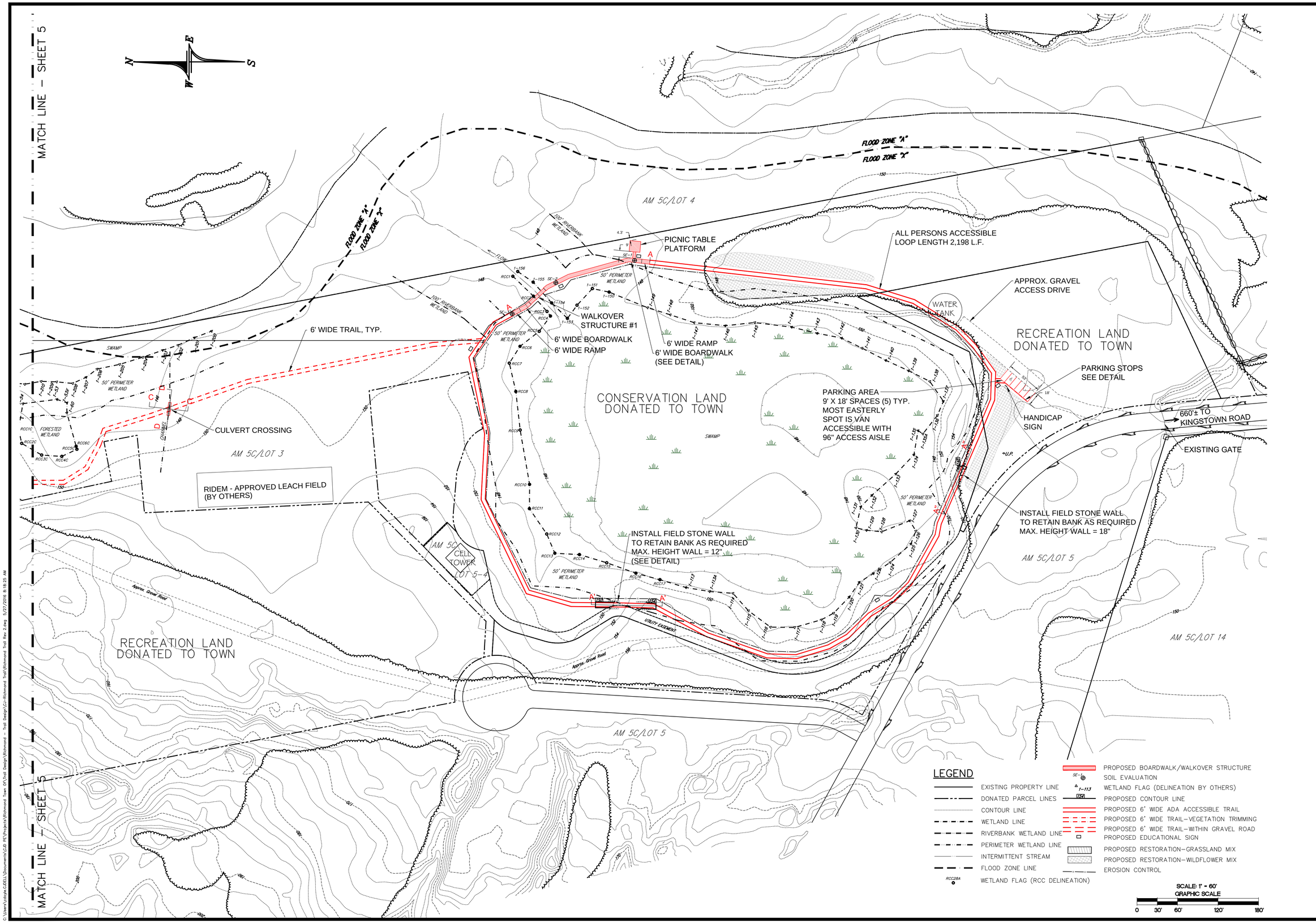

NO.	DATE	DESCRIPTION	BY

REVISIONS:

CAROLYN J. DOYLE
No. 5078
REGISTERED PROFESSIONAL ENGINEER

CJ DOYLE, P.E.
CIVIL ENGINEERING
MAILING ADDRESS
P.O. BOX 1161, HOPE VALLEY, RI
OFFICE LOCATION
1122 MAIN STREET
WEST WARWICK, RI
PHONE (401) 491-9530
cjengineer@cox.net

ADDRESS: KINGSTOWN ROAD
IN THE TOWN OF RICHMOND, RI

DATE: JUNE 25, 2015; REV. 5/27/16

SCALE: 1" = 60'

DRAWN BY: CJD

CHECKED BY: CJD

DESIGNED BY: CAROLYN J. DOYLE, P.E.

DRAWING TITLE: RICHMOND HERITAGE TRAIL LAYOUT - PLAN VIEW

LOCATED ON: LOT # 5-1 OF ASSESSORS MAP 5C

OWNED BY: TOWN OF RICHMOND

SHEET: 4 OF 8

© 2015 CJ DOYLE, P.E.

C:\Users\cjdoyle.CJDELL\Documents\CJD PE\Projects\Richmond Town Of\Trail Design\Richmond – Trail Design\CJ-Richmond Trail\Richmond Trail Rev 2.dwg 5/27/2016 8:18:23 AM

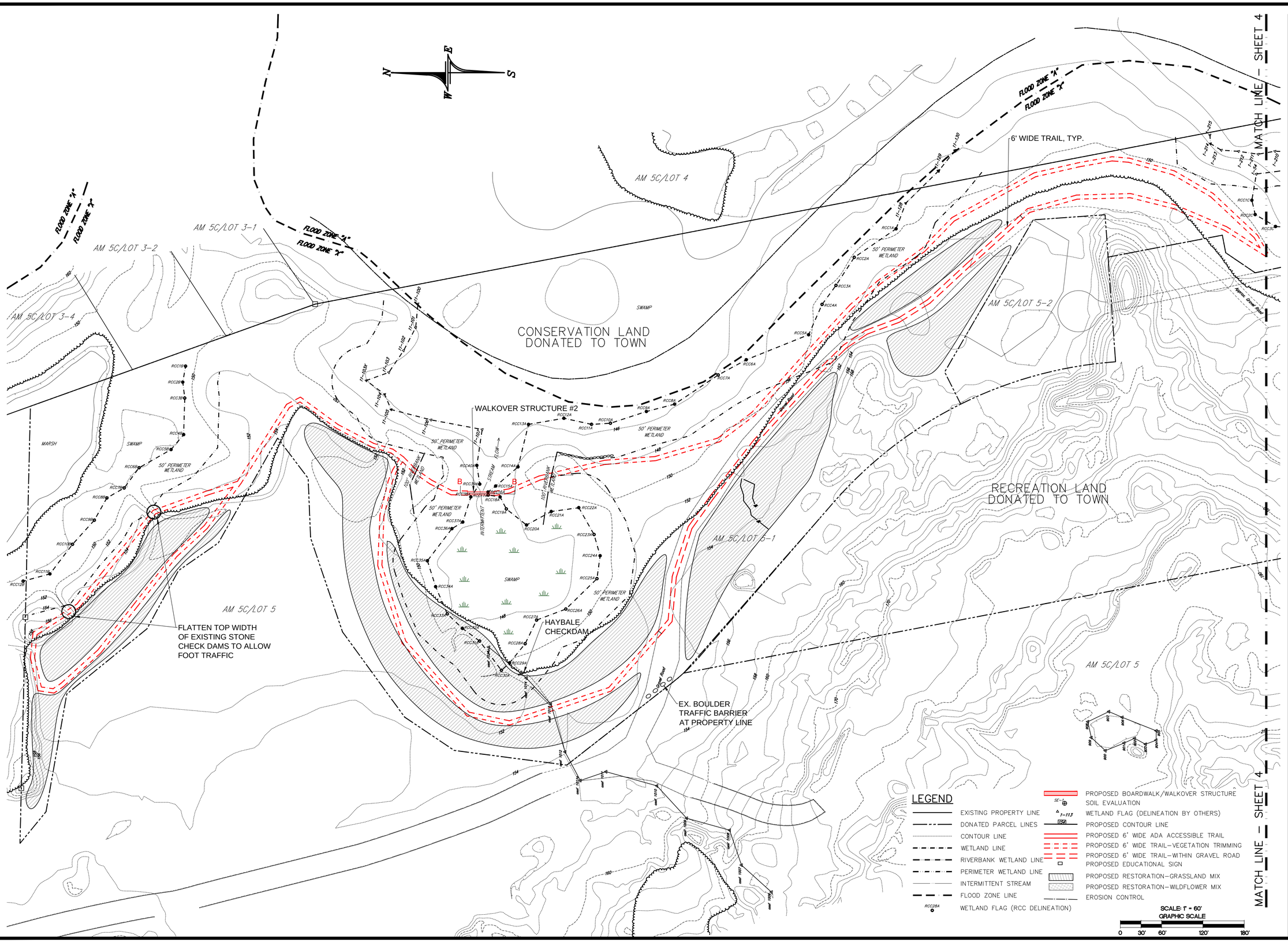

NO.	DATE	DESCRIPTION	BY

REVISIONS:

CAROLYN J. DOYLE
No. 5078
REGISTERED PROFESSIONAL ENGINEER

CJ DOYLE, P.E.
CIVIL ENGINEERING
MAILING ADDRESS
P.O. BOX 1161, HOPE VALLEY, RI
OFFICE LOCATION
1122 MAIN STREET
WEST GREENWICH, RI
PHONE (401) 491-9530
cjengineer@cox.net

ADDRESS: KINGSTOWN ROAD
IN THE TOWN OF RICHMOND, RI

DATE: JUNE 25, 2015; REV. 5/27/16

SCALE: 1" = 60'

DRAWN BY: CJD

DESIGNED BY: CAROLYN J. DOYLE, P.E.

CHECKED BY: CJD

DRAWING TITLE: RICHMOND HERITAGE TRAIL LAYOUT - PLAN VIEW

LOCATED ON: LOT # 5-1 OF ASSESSORS MAP 5C

OWNED BY: TOWN OF RICHMOND

SHEET: 5 OF 8

© 2015 CJ DOYLE, P.E.

C:\Users\cdoyle.CJDELL\Documents\CJD PE\Projects\Richmond Town GIS\Trail Design\Richmond – Trail Design\CJ-Richmond Trail\Richmond Trail Rev 2.dwg 5/27/2016 8:19:56 AM

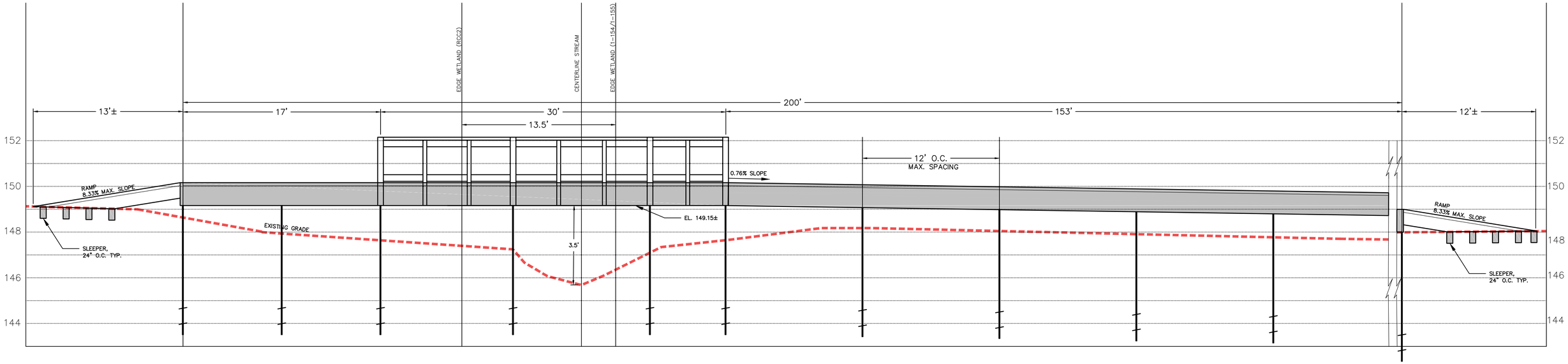

DETAIL SECTION A–A
THROUGH WALKOVER STRUCTURE #1

SCALE: HOR. 1" = 4'
VER. 1" = 2'

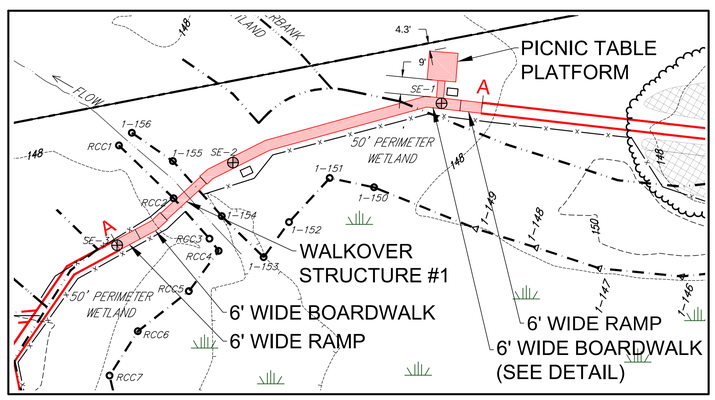

PLAN – WALKOVER #1

SCALE: 1" = 40'

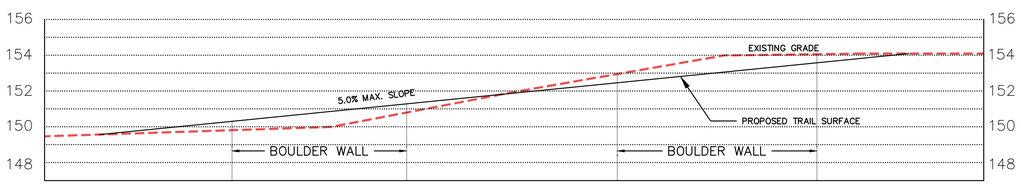

DETAIL TRAIL SECTION A'–A' (SHEET 4)

SCALE: HOR. 1" = 8'
VER. 1" = 4'

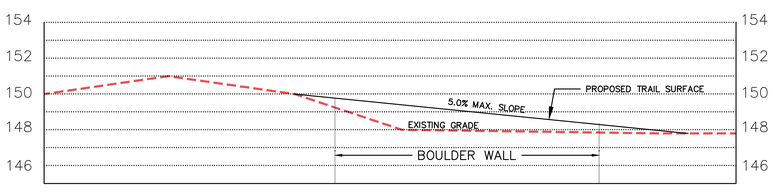

DETAIL TRAIL SECTION A''–A' (SHEET 4)'

SCALE: HOR. 1" = 8'
VER. 1" = 4'

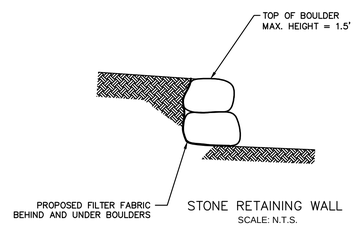

STONE RETAINING WALL

SCALE: N.T.S.

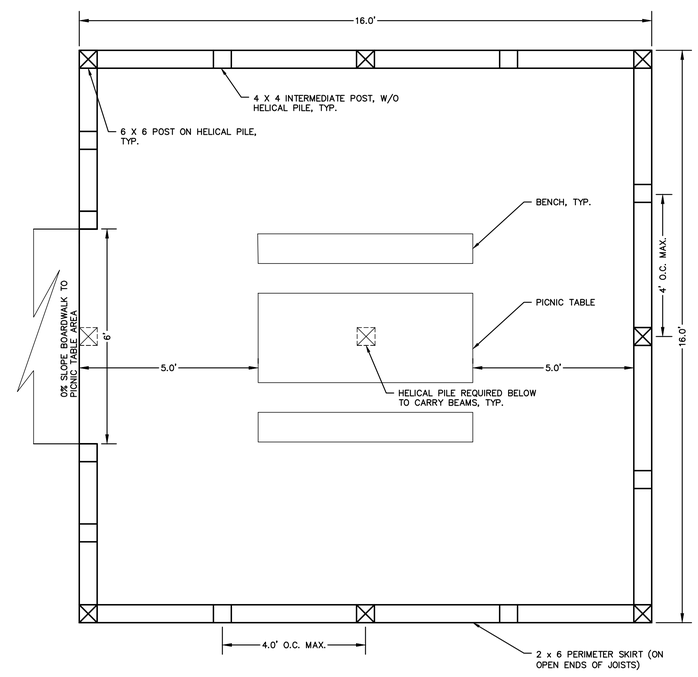

PICNIC TABLE AND PLATFORM

NO SCALE

NOTES:
1. ADA COMPLIANT PICNIC TABLE SHALL BE 6' LONG WITH TWO 6' LONG BENCHES AND BOTH ENDS ACCESSIBLE FOR A WHEELCHAIR. TABLE SHALL BE 30" WIDE, BENCHES 10" WIDE; ALL WITH OPEN STEEL MESH TOPS. PICNIC TABLE SHALL BE MODEL "WUT" AS MANUFACTURED BY PILOTROCK OR EQUAL.
2. ATTACHMENT TO THE WOOD PLATFORM SHALL BE WITH THE USE OF MANUFACTURER'S RECOMMENDED STRAPS AND ANCHORS.
3. BEAMS SHALL BE 3 X 6 (2–2 X 6), SPACED 8' O.C. MAX. & RUN PERPENDICULAR TO THE JOISTS. JOISTS SHALL BE 3 X 6 (2–2 X 6). JOISTS SHALL BE SPACED A MAX. OF 16" O.C. JOISTS SHALL BE FASTENED ON THE INTERIOR OF THE PLATFORM AT EVERY BEAM WITH JOIST HANGERS AND 10D GALVANIZED NAILS.
6 X 6 SUPPORT POSTS AND 4 X 4 INTERMEDIATE POSTS FOR THE PLATFORM SHALL BE SPACED A MAX. OF 4' O.C. SKIRT ON PLATFORM SHALL BE 2 X 6.

CJ DOYLE, P.E.
CIVIL ENGINEERING

MAILING ADDRESS: P.O. BOX 1161 HOPE VALLEY, RI 02832
OFFICE LOCATION: 1122 MAIN STREET, WYOMING, RI
PHONE (401) 491-9539
cjengine@cox.net

NO.	DATE	DESCRIPTION	BY
2	05/27/16	CLIENT REQUESTED REVISIONS	CJD
1	10/20/15	CONSTRUCTION RELATED REVISIONS	CJD

DRAWING TITLED:
SECTIONS & DETAILS – 1

LOCATED ON:
LOT 5–1 PLAT 5C

OWNED BY:
TOWN OF RICHMOND

ADDRESS:
KINGSTOWN ROAD
IN THE TOWN OF RICHMOND, RI

JUNE 25, 2015

DESIGNED BY:
CAROLYN J DOYLE, P.E.,

SCALE: AS SHOWN

DRAWN BY: CJD
CHECKED BY: CJD

DRAWING No.
SHEET 6 OF 8

CAROLYN J. DOYLE
No. 5078
REGISTERED
PROFESSIONAL ENGINEER

© 2015 CJ DOYLE, P.E.

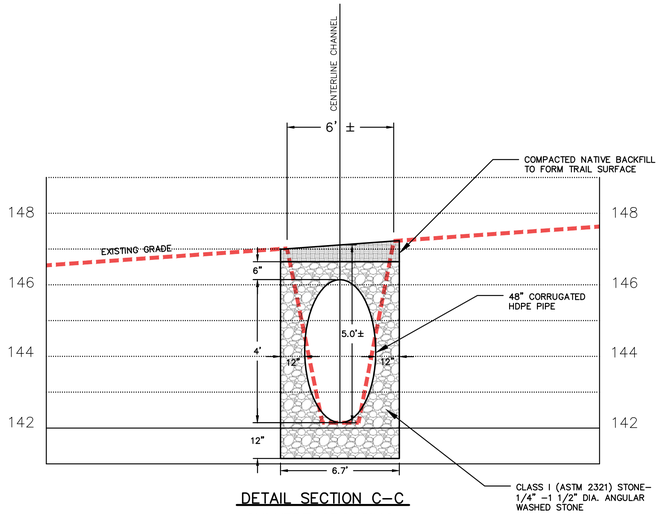

DETAIL SECTION C–C
CULVERT CROSSING

SCALE: HOR. 1" = 4'
VER. 1" = 2'

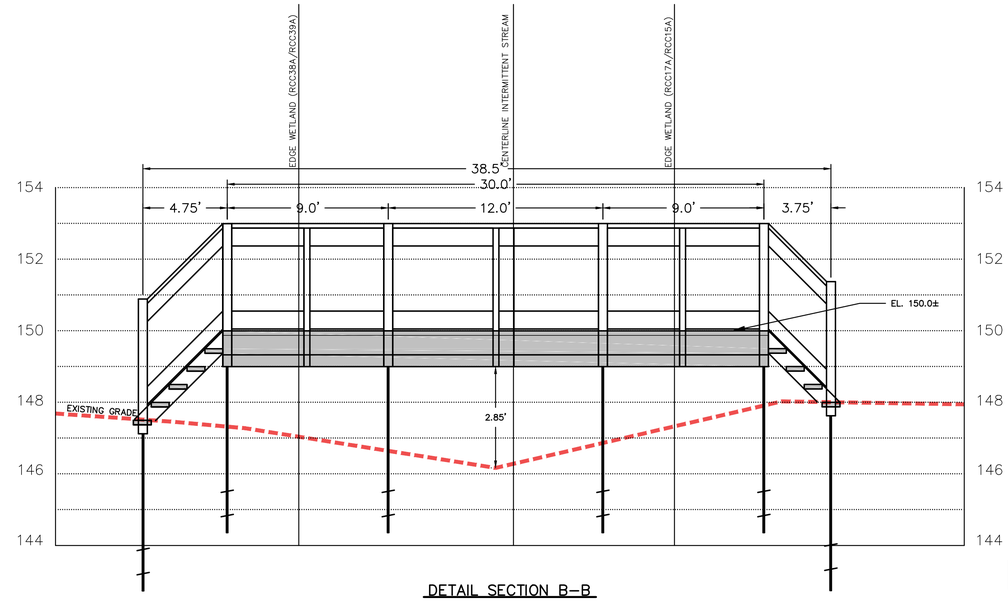

DETAIL SECTION B–B
THROUGH WALKOVER STRUCTURE #2

SCALE: HOR. 1" = 4'
VER. 1" = 2'

PLANT COMMUNITY RESTORATION SITE PREPARATION AND SEEDING

Seed Mix A – Wildflowers/Pollinating Plants

Species	Seeding Rate Lbs/acre
Indian hemp (Apocynum cannabinum)	2
Common milkweed (Asclepias syriaca)	3
False indigo (Baptista australis)	2
Partidge pea (Chamaecrista fasciculata)	7
Purple coneflower (Echinacea purpurea)	5
Evening primrose (Oenothera biennis)	2
Smooth blue aster (Symphyotrichum laeve)	1
Butterfly milkweed (Asclepias tuberosa)	1.25
Showy goldenrod (Solidago speciosa)	0.50
Tall blazing star (Liastris aspera)	1
Little bluestem (Schizachyrium scoparium)	5

Seed Mix B – Grassland

Species	Seeding Rate Lbs/acre
Switch grass (Panicum virgatum)	8.50
Little bluestem (Schizachyrium scoparium)	11.00

Site Preparation (Refer to Sheets 4 and 5 for Seeding Areas)

1. Designated areas shall be mowed and cleared of existing weedy vegetation.
2. Organic compost (e.g., Casella Organics or equivalent) shall be placed in designated sites at a rate of 175 cy/acre.
3. Compost shall be installed in prepared sites during period of October 15–March 15 and with no snow or ice covered conditions.
4. Haybale check dam and/or other erosion and sediment control measures shall be installed in swales or other site locations to prevent compost transport in runoff. Contractor shall have 6 haybales kept onsite for this purpose.
5. Seeding shall be completed during the period of April 15–May 15.

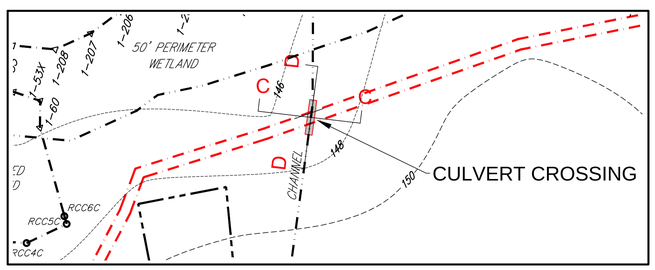

PLAN – CULVERT CROSSING

SCALE: 1" = 40'

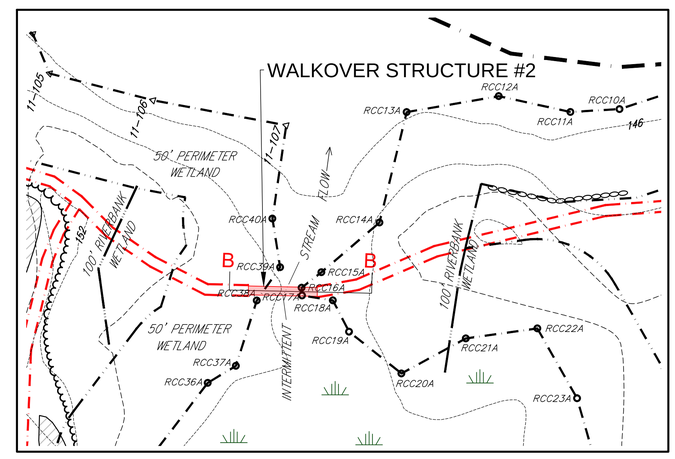

PLAN – WALKOVER #2

SCALE: 1" = 40'

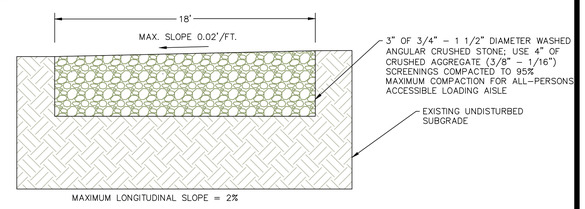

PARKING AREA CROSS SECTION

NO SCALE

PARKING AREA NOTES

1. PARKING AREA IS EXISTING EARTH SURFACE HAVING BEEN USED FOR ACCESS TO THE WATER TANK CONSTRUCTION. AREA SHALL HAVE A CRUSHED STONE SURFACE AS SHOWN IN THE DETAIL ON THIS SHEET EXCEPT AT THE ALL–PERSONS ACCESSIBLE PARKING SPOT. ALL–PERSONS ACCESSIBLE LOADING AISLE SHALL HAVE CRUSHED AGGREGATE SCREENINGS SURFACE RATHER THAN CRUSHED STONE.
2. TYPICALLY A 6" – 7" DEPTH OF AGGREGATE AS PLACED WILL COMPACT TO THE 4" DESIRED DEPTH. COMPACTION TESTING RESULTS SHALL BE PROVIDED TO THE TOWN OF RICHMOND IF REQUESTED. WATER SPRAY MAY HELP IN MEETING THE COMPACTION REQUIREMENTS.
3. PARKING AREA SHALL BE CONFIGURED AS SHOWN ON THE PLAN.
4. MAX. CROSS SLOPE SHALL BE 2%. REGRADE ONLY IF NECESSARY TO MEET THE 2% SLOPE.
5. INSTALL HANDICAP SIGN FOR ALL–PERSONS ACCESSIBLE PARKING SPOT.

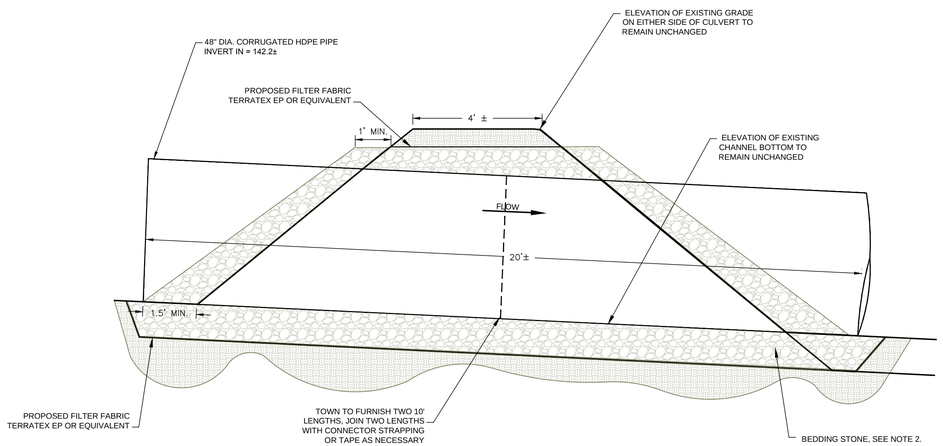

DETAIL SECTION D-D
CROSS SECTION - CULVERT

NO SCALE

NOTES:

1. CHANNEL BOTTOM ELEVATION IS TO REMAIN UNCHANGED. ELEVATIONS SHOWN ARE APPROXIMATE.
2. BED CULVERT PIPE ON 12" OF STONE OR PER MANUFACTURER'S RECOMMENDATION. PROVIDE A MINIMUM OF 12" STONE ON EITHER SIDE AND 6" OVER THE TOP OF THE PIPE.
3. COMPACT BASE, SIDEWALL AND COVER MATERIALS IN 6" - 8" LIFTS.
4. BASE STONE SHALL EXTEND ON EITHER SIDE OF CULVERT ON INLET END AS SHOWN IN SECTION D - D ABOVE.

EROSION AND SEDIMENTATION CONTROL NOTES:

Temporary and/or permanent erosion control devices such as baled hay, silt fencing, etc. shall be installed prior to any clearing or excavation. Hay bales or silt fencing shall be placed immediately down slope and adjoining areas of soil disturbance and stockpiles. installation of all erosion control devices shall be conducted in accordance to detail specifications.

Clearing of existing vegetation shall be done in a controlled manner so as to avoid extensive areas of defoliated terrain subject to erosion. Areas so disturbed shall be brought to final grades and stabilized as soon as possible.

During construction the contractor shall be responsible for maintaining drainage and runoff flow during storms and periods of rainfall.

All erosion control devices shall be inspected and maintained on a regular basis during construction, especially after each rainfall.

Due to changing characteristics of the site caused by and during construction additional erosion control measures may be required as site conditions warrant.

If construction is suspended, all disturbed areas shall be seeded and all necessary erosion control devices shall be in place and in good working order. if seeding is not possible then erosion control mats shall be placed over all disturbed soil.
Erosion control blankets (mats) shall be installed according to the manufacturers recommendations. Erosion control blankets (mats) shall be manufactured by North American Green) or approved equivalent and installed according to the manufacturer's recommendations.

All erosion control methods, materials and maintenance shall be done in accordance with the "Rhode Island Soil Erosion and Sediment Control Handbook".

Unless otherwise noted in the restoration notes, all areas which are disturbed during construction are to be brought to finished grade with at least 6" minimum depth of good quality loam and all soil amendments deemed necessary. The area shall be seeded with a quick germinating grass seed such as URI #2 or approved equivalent.

The contractor shall provide for all seeded areas to be watered and in good condition until a good healthy and uniform growth is established over the entire soil disturbance area.

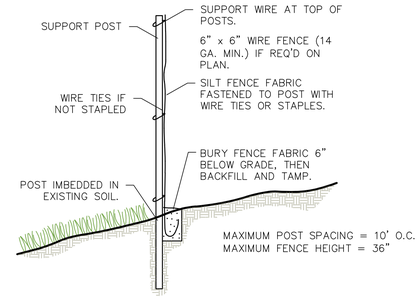

SILT FENCE DETAIL

NOT TO SCALE

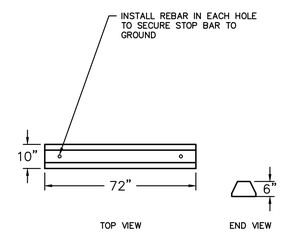

DETAIL – PARKING STOPS

1. PARKING STOPS SHALL BE OF THE DIMENSIONS SHOWN AND MADE OF PRECAST CONCRETE WITH INTERNAL REBAR. STOPS SHALL BE ANCHORED IN PLACE WITH 1/2 INCH REBAR SPIKE, 20 INCHES LONG IN EACH HOLE IN THE STOP. USE 5/8 INCH WASHER BETWEEN TOP OF SPIKE AND CONCRETE STOP.
2. PARKING AREA SHALL BE CONFIGURED AS SHOWN ON THE PLAN.
3. MAX. CROSS SLOPE SHALL BE 2%. REGRADE ONLY IF NECESSARY TO MEET THE 2% SLOPE.
4. PROVIDE HANDICAP SIGN FOR ALL PERSONS ACCESSIBLE PARKING SPOT.

CJ DOYLE, P.E.
CIVIL ENGINEERING

MAILING ADDRESS: P.O. BOX 1161 HOPE VALLEY, RI 02832
OFFICE LOCATION: 1122 MAIN STREET, WYOMING, RI
PHONE (401) 491-9530
cjengine@cox.net

NO.	DATE	DESCRIPTION	BY
1	05/27/16	CLIENT REQUESTED REVISIONS	CJD

DRAWING TITLED:
SECTIONS & DETAILS – 2

LOCATED ON:
LOT 5–1 PLAT 5C

OWNED BY:
TOWN OF RICHMOND

ADDRESS:
KINGSTOWN ROAD
IN THE TOWN OF RICHMOND, RI

JUNE 25, 2015

DESIGNED BY: CAROLYN J DOYLE, P.E.,

SCALE: AS SHOWN

DRAWN BY: CJD
CHECKED BY: CJD

DRAWING No.
SHEET 7 OF 8

CAROLYN J. DOYLE
No. 5078
REGISTERED PROFESSIONAL ENGINEER

© 2015 CJ DOYLE, P.E.

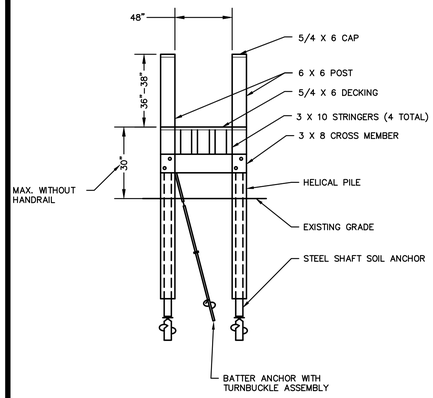

1. CONTRACTOR SHALL PROVIDE ONE DIAGONAL BRACE IF DECK IS 3–4.5 FEET ABOVE THE GROUND AND TWO DIAGONAL BRACES AS CROSS BRACES IF THE DECK IS GREATER THAN 4.5 FEET ABOVE THE GROUND.
2. PROVIDE 5" ADA CURBING ON BOTH SIDES OF BOARDWALK SECTION OF WALKOVER STRUCTURE #1.
3. WALKOVER STRUCTURE #1 SHALL HAVE 6' WIDE RAMP AND BOARDWALK PER DETAILS ON THIS SHEET.

DETAIL CROSS SECTION WALKOVER STRUCTURE

NO SCALE

NOTES:

1. ALL NOTES AND DETAILS SHOWN ARE TYPICAL FOR SIMILAR APPLICATIONS. CONTRACTOR SHALL FIELD VERIFY ALL SITE CONDITIONS AND DIMENSIONAL DATA PRIOR TO CONSTRUCTION. ANY DISCREPANCY NOTED SHALL BE BROUGHT TO THE ATTENTION OF THE OWNER (TOWN OF RICHMOND).

2. THE REQUIRED NUMBER OF TREADS AND RISERS ARE TO BE CONFIRMED IN THE FIELD AT THE TIME OF CONSTRUCTION. STAIRS SHOWN HAVE AN 6" RISER AND 12" TREAD.

3. HANDRAILS ARE REQUIRED ON ALL STAIRS AND ALL LOCATIONS WHERE THE DECK IS MORE THAN 30" ABOVE THE EXISTING GROUND.

4. ALL LUMBER SHALL BE SOUTHERN YELLOW PINE AND PRESSURE TREATED WITH CCA AT A RATE OF 0.6 LBS. PER CUBIC FOOT. OTHER TYPES OF MATERIALS MAY BE USED FOR THE DECKING AND RAILINGS AS LONG AS LOAD AND WEATHER RESISTANT CHARACTERISTICS ARE EQUIVALENT TO THE MATERIAL DESIGNED ON THESE PLANS.

5. THE WALKOVER STRUCTURES SHALL SUPPORT A LIVE LOAD OF AT LEAST 40 LBS./SQUARE FOOT.

6. USE OF HEAVY EQUIPMENT WITHIN THE WETLAND, 50' PERIMETER WETLAND OR 100' RIVERBANK WETLAND TO INCLUDE TEMPORARY MATS, AS NEEDED TO MINIMIZE SOIL DISTURBANCES. THE HELICAL PILES SHALL BE PLACED ON UNDISTURBED SOIL AT THE BASE OF EVERY PILE AS INDICATED ON THE PLANS AND DETAILS. INTERMEDIATE POSTS SHALL BE REQUIRED WHERE SPACING BETWEEN PILES EXCEEDS 6'. ALL HELICAL PILES SHALL BE BACKFILLED AND TAMPED TO FINISHED GRADE. HELICAL PILES SHALL BE BY VIKING HELICAL ANCHORS, PIER TECH SYSTEMS, LLC, HUBBELL POWER SYSTEMS, INC OR EQUIVALENT AND INSTALLED PER THE MANUFACTURER'S RECOMMENDATION AND TO THE MINIMUM TORQUE RECOMMENDATION. HELICAL PILES MAY BE OF VARIOUS EXTENSION DEPTHS AT THE CONCLUSION OF THE CONSTRUCTION. A SIGNED AND STAMPED SHOP DRAWING BY A REGISTERED PROFESSIONAL ENGINEER REGISTERED AND AUTHORIZED TO DO BUSINESS IN THE STATE OF RHODE ISLAND IS REQUIRED FOR THE WALKOVER STRUCTURES AND HELICAL PILE INSTALLATION. SHOP DRAWING SHALL INCLUDE ALL CONNECTION DETAILS, MATERIALS AND INSTALLATION METHODS FOR THE CONSTRUCTION.

7. BOARDWALK AND WALKOVER STRUCTURE #1 CONSTRUCTION SHALL PROGRESS FROM THE NORTH TO THE SOUTH OF THE SITE WHEN NO STANDING WATER OVER SOILS IS PRESENT. MATS MAY BE NEEDED FOR EQUIPMENT ACCESS TO MINIMIZE SOIL DISTURBANCES. CRUSHED STONE TRAIL ALIGNMENT ON EACH SIDE OF THE BOARDWALK AND WALKOVER STRUCTURE SHALL BE CONFIRMED PRIOR TO CONSTRUCTION OF THE WALKOVER STRUCTURE AND BOARDWALK.

8. ALL METAL FASTENERS SHALL BE HOT–DIPPED GALVANIZED OR MARINE GRADE STAINLESS STEEL. IT IS RECOMMENDED THAT A RUST PREVENTIVE BE APPLIED TO ALL METAL FASTENERS AT LEAST ONCE PER YEAR OR AS NEEDED.

9. WALKOVER AND BOARDWALK STRUCTURE CONSTRUCTION SHALL BE IN ACCORDANCE WITH ALL OSHA REGULATIONS, ESPECIALLY, IN THE PROPER HANDLING AND DISPOSAL OF PRESSURE TREATED WOOD MATERIALS.

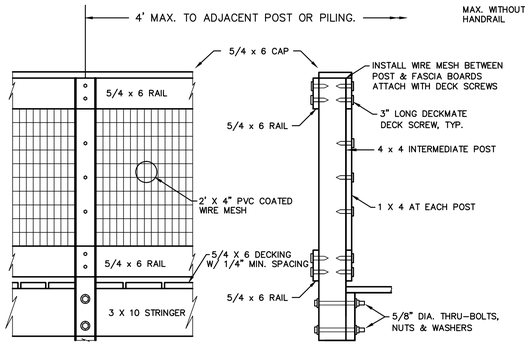

SIDE VIEW

END VIEW

1. HAND RAIL TO BE INSTALLED ON BOTH SIDES OF STAIRS/LANDINGS AND AROUND PLATFORM.
2. 5/4 X 6 RAILS TO BE FASTENED TO PILES WITH 3" LONG DECKMATE DECK SCREWS.
3. WIRE MESH SHALL BE 14 GAUGE (GALVANIZED STEEL CORE) WITH BLACK PVC COATING.

HAND RAILING DETAIL

SCALE: NONE

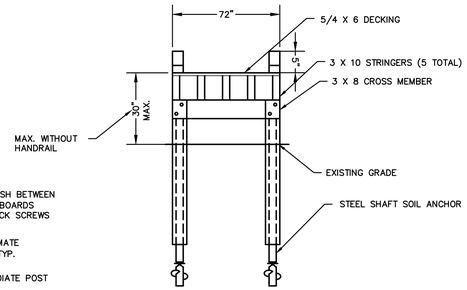

1. STRINGERS SHALL BE A MAX. OF 18" O.C.

DETAIL BOARDWALK SECTION FOR WALKOVER STRUCTURE #1

NO SCALE

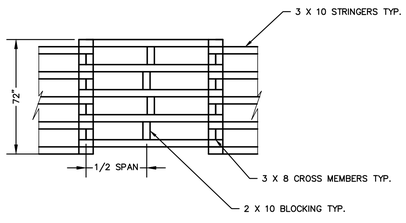

DETAIL BLOCKING FOR BOARDWALK

NO SCALE

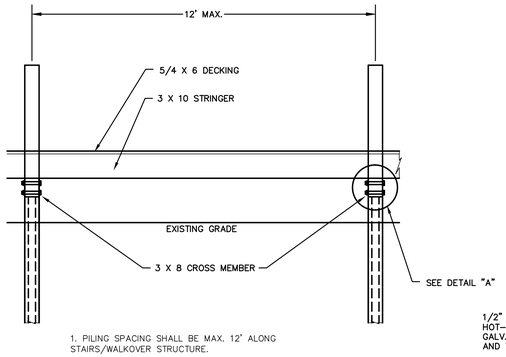

1. PILING SPACING SHALL BE MAX. 12' ALONG STAIRS/WALKOVER STRUCTURE.

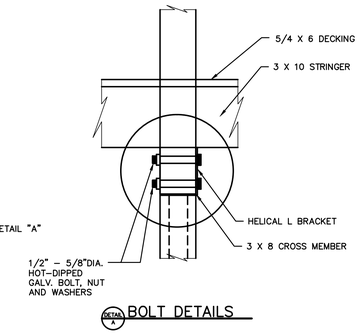

DETAIL A BOLT DETAILS

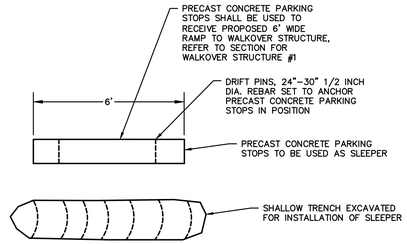

1. SLEEPERS SHALL BE SPACED A MAXIMUM OF 24" ON CENTER.

DETAIL – TIMBER SLEEPER

NO SCALE

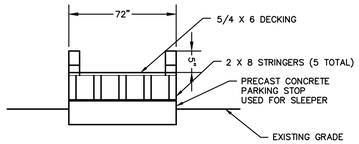

1. STRINGERS SHALL BE A MAX. OF 18" O.C..

DETAIL RAMP SECTION FOR WALKOVER STRUCTURE #1

NO SCALE

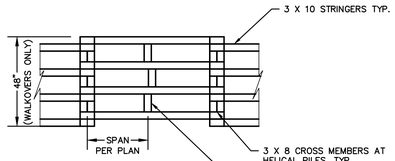

1. FOR PICNIC PLATFORM CROSS MEMBERS AT HELICAL PILES SHALL BE 3 X 6. BLOCKING SHALL BE 2 X 6 AND INSTALLED AT THE 4 X 4 INTERMEDIATE POSTS (MAX. 4' O.C.).

DETAIL BLOCKING FOR WALKOVERS & PICNIC PLATFORM

NO SCALE

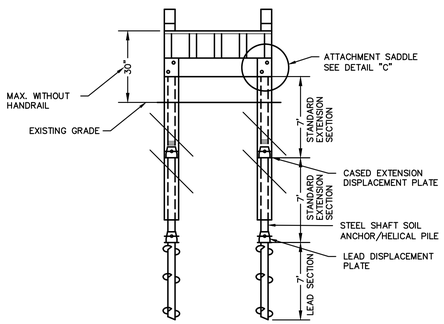

1. CONTRACTOR SHALL BE FAMILIAR WITH AND HAVE EXPERIENCE IN HELICAL PILE INSTALLATION.
2. CONTRACTOR SHALL REVIEW AND BE FAMILIAR WITH SITE CONDITIONS AND SOIL EVALUATIONS AS PROVIDED IN THE BID PACKAGE.
3. HELICAL PILE MANUFACTURER MAY PROVIDE FREE TRAINING TO THE CONTRACTOR. IF SO CONTRACTOR SHALL PARTICIPATE IN THE TRAINING.
4. HELICAL PILE SYSTEM SHALL INCLUDE 7' LEAD SECTION AND TWO 7' EXTENSIONS FOR A TOTAL OF 14'–15' EMBEDMENT.
5. DETAILS FOR HELICAL PILES MAY VARY IN DIAMETER AND LENGTH BASED ON THE SUPPLIER CHOSEN. DIMENSIONS SHOWN ABOVE ARE TYPICAL AND FOR EXAMPLE ONLY.

HELICAL PILE DETAIL

NO SCALE

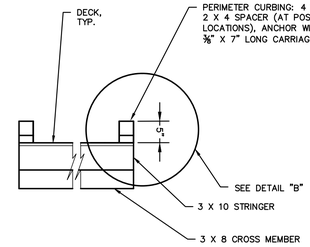

BOARDWALK CURBING DETAIL

NO SCALE

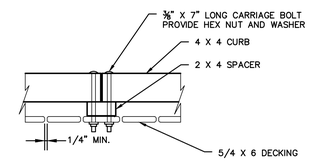

1. 2 X 4 ATTACHED EVERY 2' O.C. ALONG LENGTH.

DETAIL B CURB FASTENING DETAILS

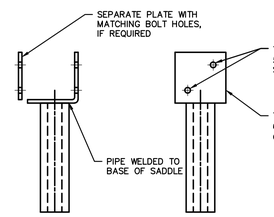

DETAIL C HELICAL PILE SADDLE DETAIL

1. DIMENSIONS OF HELICAL PILE SADDLES AND ATTACHING HARDWARE VARY BY MANUFACTURER. DETAIL IS SHOWN FOR REFERENCE ONLY.
2. TYPICAL ATTACHMENT OF SADDLE TO TIMBER DECKING IS WITH TWO HEX HEAD HOT DIPPED GALV. BOLTS WITH NUTS AND LOCKWASHERS.

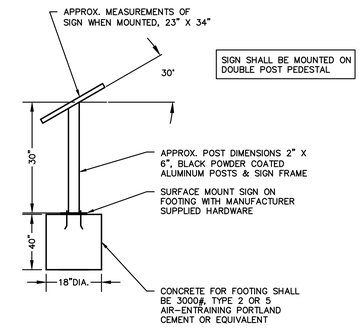

DETAIL EDUCATIONAL SIGNS

NO SCALE

1. SIGNS SHALL MANUFACTURED AS CUSTOM HIGH PRESSURE LAMINATE (CHPL) COMPOSED OF SEVERAL LAYERS OF PHENOLIC RESIN IMPREGNATED KRAFT FILLER PAPER, A DIGITALLY IMAGED GRAPHIC, A LAYER OF MELAMINE RESIN, SURFACED BY A LAYER OF TRANSLUCENT EXTERIOR UV/GRAFFITI OVERLAY PROTECTION.
2. THE ENTIRE PANEL, INCLUDING EXTERIOR OVERLAY, MUST BE BONDED UNDER HEAT AND EXTREME PRESSURE TO FORM A COMPOSITE PANEL.
3. THE FINISH MUST BE SMOOTHLY TEXTURED WITH REFLECTIVITY OF 30+ OR –5 GLOSS UNITS.
4. THE CHPL GRAPHICS MUST BE WARRANTED FOR A MINIMUM OF 10 YEARS AGAINST FADING, DE–LAMINATION AND WEATHER DETERIORATION WITHOUT ANY REQUIREMENT FOR APPLICATION OF SEALANT.
5. PANELS MUST BE ABLE TO BE CLEANED WITH ANY SOLVENT AND NOT RESTRICT USE OF PRODUCTS CONTAINING LACQUER THINNER OR ACETONE.
6. ALL CUTTING AND FINISHING TO BE DONE USING A CNC ROUTER.
7. GRAPHICS MUST BE MADE USING 12–COLOR HIGH DEFINITION PRINTING TECHNOLOGY.
8. VENDOR SHALL PROVIDE A SAMPLE FROM A SUPPLIED FILE TO CONFIRM QUALITY.
9. CONTRACTOR SHALL PROVIDE AND INSTALL CONCRETE FOOTING, SIGN POST AND FRAME. DIGITAL IMAGE FOR THE SIGN SHALL BE PROVIDED BY THE TOWN OF RICHMOND. INSTALLATION OF THE PLAQUE SIGN IN THE FRAME SHALL BE BY THE TOWN OF RICHMOND.
10. LOCATION OF SIGNS SHALL BE AS SHOWN ON THE PLANS CONFIRMED IN THE FIELD BY THE TOWN OF RICHMOND.
11. INSTALLATION SHALL BE IN ACCORDANCE WITH MANUFACTURER'S RECOMMENDATION.
12. SIGNAGE SHALL BE BY FOSSIL INDUSTRIES INC., IZONE GRAPHICS OR EQUIVALENT MANUFACTURER.

TRAIL CONSTRUCTION NOTES:

1. THE APPROXIMATE TRAIL CENTERLINE HAS BEEN FLAGGED FOR FIELD REFERENCE. SOME FIELD FIT WILL BE REQUIRED TO SUIT.

2. TRAIL CONSTRUCTION SHALL COMMENCE FROM THE AREA OF THE PROPOSED PARKING LOT AND WORK TOWARD THE WETLANDS WALKOVER STRUCTURES. LOCATIONS OF PILE SUPPORTS, STAIRS, RAMPS, ETC. SHALL BE CONFIRMED PRIOR TO COMMENCING CONSTRUCTION OF ANY OF THE WALKOVER STRUCTURES.

3. BRUSH SHALL BE CLEARED AND TREE LIMBS PRUNED AS NECESSARY FOR THE TRAIL CONSTRUCTION. THE TRAIL ALIGNMENT SAHLL BE MODIFIED AT SPECIFIC LOCATIONS TO AVOID REMOVAL OF TREES WITH DIAMETER AT BREAST HEIGHT OF 8 INCHES OR GREATER.

4. ALL PERSONS ACCESSIBLE TRAIL LOOP SHALL BE CONSTRUCTED WITH A STONEDUST SURFACE (SEE DETAIL). FINISH ACCESSIBLE TRAIL SURFACE AS REQUIRED BY REGULATION SHALL RESIST DEFORMATION BY INDENTATIONS AND SHALL NOT BE PERMANENTLY AFFECTED BY EXPECTED WEATHER CONDITIONS AND SHALL SUSTAIN NORMAL WEAR AND TEAR FROM THE EXPECTED USES BETWEEN PLANNED MAINTENANCE. MAXIMUM LONGITUDINAL SLOPE SHALL NOT EXCEED 5%. CROSS SLOPE SHALL NOT EXCEED 2%. THE SURFACE OF THE TRAIL SHALL BE AS SMOOTH AS POSSIBLE WITH MINIMAL TREAD OBSTACLES. NO TREAD OBSTACLE CAN BE GREATER THAN 2" IN HEIGHT (MEASURED VERTICALLY) WITH A ½" VERTICAL HEIGHT BEING OPTIMUM.

5. LOCATION OF EXISTING UTILITIES IN OR NEAR THE TRAIL IS UNKNOWN. VERIFY LOCATIONS PRIOR TO CONSTRUCTION BY CALLING RI DIGSAFE AT 888–DIG–SAFE.

6. SOILS IN THE AREA OF THE PROPOSED TRAIL SYSTEM ARE GENERALLY FINE SANDY LOAMS TO SANDY LOAMS WITH GRAVEL, IN HYDROLOGIC GROUP A OR B EXCEPT IN AND AROUND WETLAND AREAS. THEREFORE, NATIVE IN PLACE SOILS MAY BE USED FOR GRAVEL BASE UNLESS DEEMED UNSUITABLE BY THE OWNER (TOWN OF RICHMOND).

7. BALANCE OF TRAIL OUTSIDE OF THE ALL PERSONS ACCESSIBLE LOOP SHALL BE CLEARED OF STONES OR GROUND DEBRIS, SMALL GROWTH REMOVED WITHIN THE 6' WIDE TRAIL, LIMBS PRUNED TO ACCOMMODATE PEDESTRIAN TRAFFIC AND NATIVE SOIL SURFACE TO REMAIN UNLESS DEEMED UNSUITABLE (I.E. PEAT OR ORGANICS) BY THE OWNER (TOWN OF RICHMOND). NATIVE SOIL SURFACE SHALL BE COMPACTED TO THE DESIRED FINISH GRADE. IN THE EVENT THAT THE SURFACE IS UNSUITABLE 6" OF PROCESSED GRAVEL SHALL BE PLACED AND COMPACTED TO THE DESIRED FINISH GRADE. USE 10 CY FOR BIDDING PURPOSES.

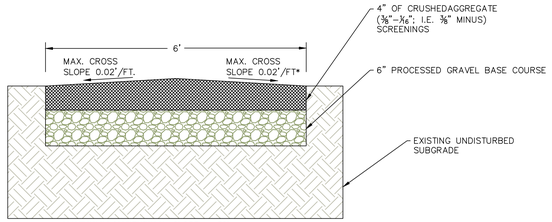

MAXIMUM LONGITUDINAL SLOPE = 5%

TYPICAL ALL PERSONS TRAIL CROSS SECTION

NO SCALE

CRUSHED AGGREGATE GRADATION

U.S. SIEVE NO.	PERCENT PASSING BY WEIGHT
# 3/8"	100
# 4	90–100
# 8	55–80
# 16	40–70
# 30	25–50
# 200	6–15*

*IF THE CRUSHED AGGREGATE DOES NOT MEET AT LEAST THE 6% PASSING THE #200 SIEVE, CLAY FINES MAY BE ADDED AND MIXED WITH THE AGGREGATE.

ALL PERSONS ACCESSIBLE LOOP TRAIL NOTES:
1. THIS IS A TYPICAL TRAIL SECTION FOR THE ALL PERSONS ACCESSIBLE LOOP.
2. CRUSHED AGGREGATE SHALL MEET GRADATION SHOWN HEREIN WITH A MAXIMUM PARTICLE SIZE OF 3/8". CRUSHED AGGREGATE SHALL BE FROM BLUESTONE OR OTHER HARD STONE AND BE OF IRREGULAR AND ANGULAR SHAPE TO ALLOW INTERLOCKING INTO A TIGHT MATRIX. ROUNDED PARTICLES OR DECOMPOSED GRANITE ARE NOT ACCEPTABLE. TESTING RESULTS SHALL BE SUBMITTED TO THE TOWN OF RICHMOND TO APPROVE THE GRADATION BEFORE THE MATERIAL IS INSTALLED.
3. INTENDED CONSTRUCTION SEQUENCE: REMOVE TOPSOIL, ORGANICS, ROCK, ROOTS, AND ANY OTHER UNSUITABLE MATERIALS (I.E. PEAT OR ORGANICS), EXCAVATE TO THE DESIRED BASE ELEVATION, PLACE 6" PROCESS GRAVEL, COMPACT WITH MECHANICAL SIDEWALK PAVER OR VIBRATORY COMPACTOR TO 95% MAXIMUM COMPACTION, INSTALL AND GRADE ⅜" SCREENINGS, ROLL & COMPACT TO 95% MAXIMUM COMPACTION. TYPICALLY A 6"–7" DEPTH OF AGGREGAE AS PLACED WILL COMPACT TO THE 4" DESIRED DEPTH. COMPACTION TESTING RESULTS SHALL BE PROVIDED TO THE TOWN OR RICHMOND IF REQUESTED. WATER SPRAY MAY HELP IN MEETING THE COMPACTION REQUIREMENTS.
4. LENGTH OF ALL PERSONS ACCESSIBLE TRAIL FOR THE PROPOSED PROJECT IS 2,198'±. WIDTH IS 6' EXCLUDING WALKOVER STRUCTURES.
5. EXCESS EXCAVATED MATERIAL SHALL BE USED ONSITE PER DIRECTION BY TOWN OF RICHMOND OR REMOVED AND DISPOSED OF OFFSITE AT THE TOWN'S DISCRETION.

CJ DOYLE, P.E.
CIVIL ENGINEERING
MAILING ADDRESS: P.O. BOX 1161 HOPE VALLEY, RI 02832
OFFICE LOCATION: 1122 MAIN STREET, WYOMING, RI
PHONE (401) 491-9530
cjengine@cox.net

NO.	DATE	DESCRIPTION	BY
2	05/27/16	CLIENT REQUESTED REVISIONS	CJD
1	10/20/15	CONSTRUCTION RELATED REVISIONS	CJD

DRAWING TITLED:
DETAILS – 3

LOCATED ON:
LOT 5–1 PLAT 5C

OWNED BY:
TOWN OF RICHMOND

ADDRESS:
KINGSTOWN ROAD
IN THE TOWN OF RICHMOND, RI

JUNE 25, 2015

DESIGNED BY: CAROLYN J DOYLE, P.E.,

SCALE: AS SHOWN

DRAWN BY: CJD
CHECKED BY: CJD

DRAWING No.
SHEET 8 OF 8

CAROLYN J. DOYLE
No. 5078
REGISTERED PROFESSIONAL ENGINEER

© 2015 CJ DOYLE, P.E.

Soil description for Location #1 along Richmond Heritage Trail boardwalk alignment: January 29th, 2016. M.H. Stolt. The soil was described at the southern end of the proposed boardwalk. Tiling spade and bucket auger were used to collect soil samples. Free water was identified at 38 cm (15”).

Horizon Designation	Depth (cm)	Munsell Color	Textural Class	Redoximorphic Features
Oe	0-12	5YR 2.5/2	Hemic materials	--
A	12-25	10YR 2/1	Mucky sandy loam	--
Bg	25-40	10YR 3/2 and 4/2	Sandy loam	--
Bw	40-50	10YR 5/4	Sandy loam/silt loam	--
Bhs	50-80	5YR 2.5/2, 5YR 2.5/1, 7.5YR 2/1	Fine sandy loam	--
BC	80-100	10YR 5/3	Fine sandy loam	Many 10YR 6/2 depletions, common 10YR 5/6 Fe masses, common coarse 10YR 5/6 nodules
Cg	100-150+	10YR 5/2	Fine sandy loam	Common 10YR 6/4 Fe masses

<1% slope. Soil formed in glaciofluvial deposits typically stratified sands and gravels.

Soil description for Location #2 at Richmond Heritage Trail boardwalk alignment: January 29th, 2016. M.H. Stolt. The soil sampling site was described approximately mid-point along the boardwalk alignment. Tiling spade and bucket auger were used to collect soil samples. Free water was identified at 45cm (18”).

Horizon Designation	Depth (cm)	Munsell Color	Textural Class	Redoximorphic Features
Oe	0-10	5YR 2.5/2	Hemic materials	--
EA	10-20	10YR 4/2 and 3/2	Fine sandy loam	--
Bhs	20-40	10YR 2/1	Sandy loam	--
Bhsm	40-60	5YR 2.5/2	Gravely loamy coarse sand	--
Cg	60-80	2.5Y 6/2	Silt loam	Common 10YR 5/4 Fe masses
C	80-100	7.5YR 4/4	Very gravelly coarse sand	--

<1% slope. Soil formed in glaciofluvial deposits typically stratified sands and gravels. Auger refusal on coarse gravels and fine cobbles at 100 cm.

Soil description for Location #3 along Richmond Heritage Trail boardwalk transect: January 29th, 2016. M.H. Stolt. Samples were collected approximately 5 meters (15 ft) from the north side of the wetland outlet ditch at the northern end of the proposed boardwalk. Tiling spade and bucket auger were used to collect samples. Free water was identified at 120 cm (48").

Horizon Designation	Depth (cm)	Munsell Color	Textural Class	Redoximorphic Features
Oe	0-5	5YR 2.5/2	Hemic materials	--
Ap	5-20	10YR 2/1	Fine sandy loam	--
Bw	20-50	2.5Y 5/3	Fine Sandy loam	Common 10YR 5/6 Fe masses, common 10YR 5/2 depletions
Cg1	50-70 cm	10YR 5/2	silt loam	common 10YR 5/4 Fe masses
Cg2	70-120 cm	2.5Y 6/2	Loamy sand	common 10YR 5/4 Fe masses
Cg3	120-150 cm+	2.5Y 6/1	Loamy sand	

<3% slope. Soil formed in glaciofluvial deposits typically stratified sands and gravels.

Comments relative to issues with frost heave of pilings to support the boardwalk:

The potential for frost heave in the upper 50 cm (20") of these soils is minimal due to the sandy nature of the soil materials and the heavy woodland cover that will remain along the proposed boardwalk. Below 50 cm depth, soil temperatures rarely dip lower than freezing (See New England soil temperature data at http://nesoil.com/climate/risoiltemp.htm).

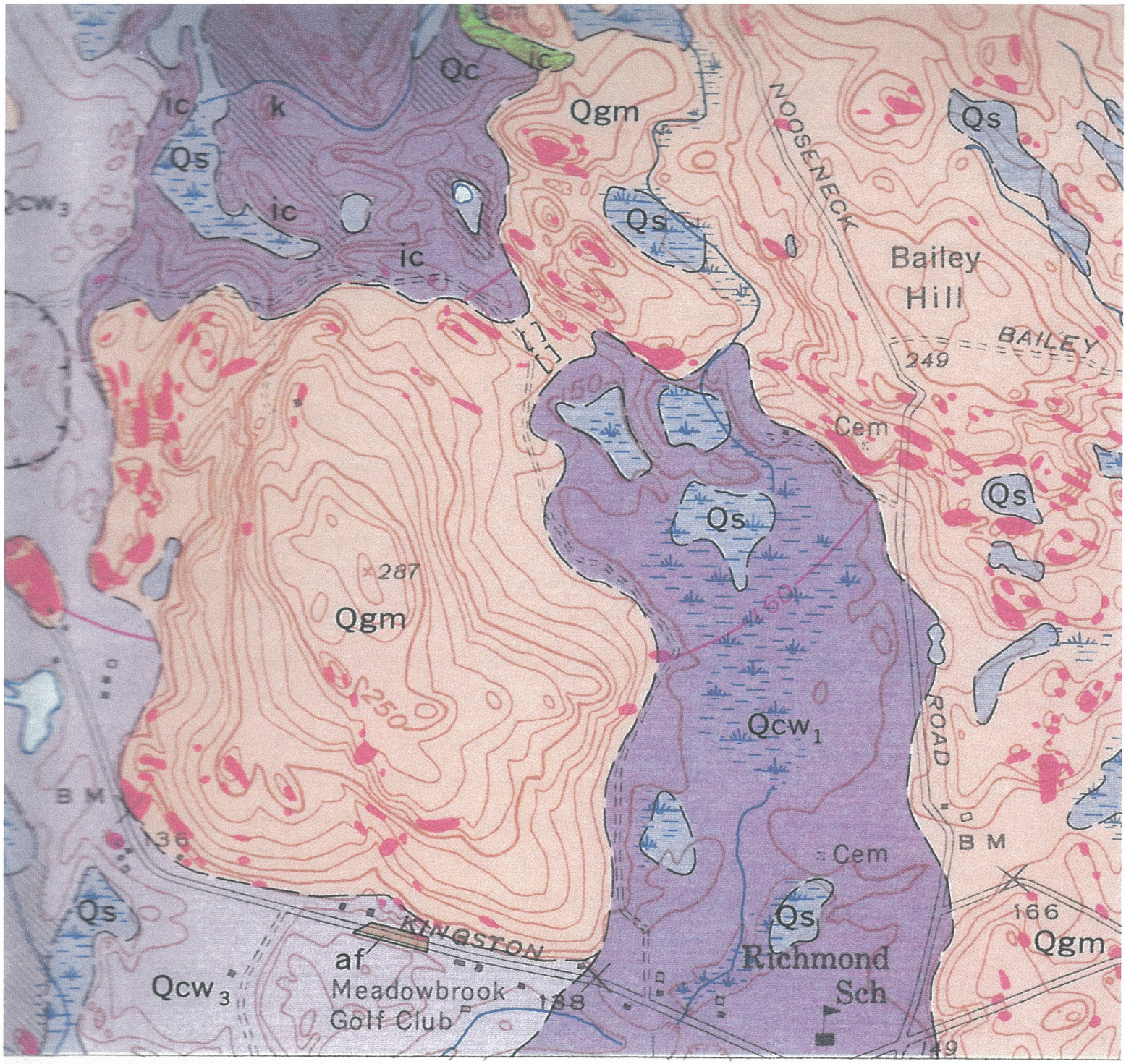

40′

AP

LE, RHODE ISLAND

LOGY

DAN RUSSELL

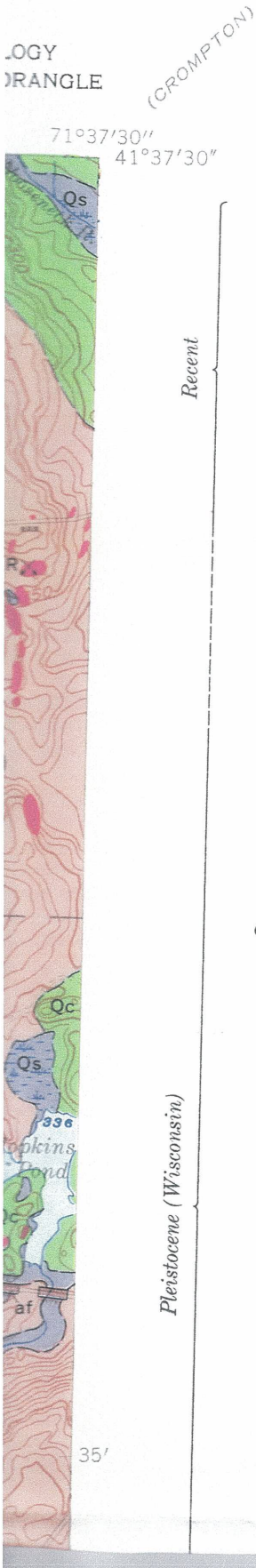

EXPLANATION

Recent

Qs

Swamp deposits

Sand and silt, generally includes decayed organic material. May include thin peaty layers in some places

Qal

Alluvial deposits

Fine- to medium-grained stratified sand; locally includes organic material; generally thin

Qta

Talus deposits

Angular blocks of rock form three small talus slopes on Mount Tom

Pleistocene (Wisconsin)

Qcw_3
Qcw_2
Qcw_1

Western valley deposits

Glaciofluvial ice-contact sand and gravel deposits of the Wood River valley and its tributary valleys

Qce_2
Qce_1

Eastern valley deposits

Glaciofluvial ice-contact sand and gravel deposits of the Beaver River valley

Deposits graded to a single local base level and essentially of one age are known as sequences and are shown by a single color. Letters w *and* e *indicate deposits of the western and eastern valleys respectively. Subscript numbers indicate order of deposition with 1 the oldest. Age relationships between deposits of the western and eastern valleys are not definitely known*

Qc

Uncorrelated ice-contact deposits

Glaciofluvial ice-contact sand and gravel deposits not correlative with deposits of known age

Qgm

Ground moraine

A layer of till mostly 10 to 20 feet thick. Contains, in some places, a high percentage of rottenstone fragments

QUATERNARY